Guangzhou Haoyang Electronic Co., Ltd.
Address: No. 18, the First Crossroad of Lianyun Road, Shiqi Town, Panyu District, Guangzhou.
TEL:+86 2039966388/39966399 FAX:+86 2039966388/39966399
Email: www.terbly.com Website: sales@teroly.com

LSP230PRO LED SPOT

Product parameters

Optical system
Source: 230W White LED
Fixture CT: 8500K
Life span：>20,000h
CRI: up to 72

Movement
Pan: 540°/630° optional(16 bit)
Tilt: 270°(16 bit)
Auto X/Y repositioning

Color system

1 Color wheel: 7 dichroic filters + open

Gobo system
1 Rotating gobo wheel: 7 interchangeable gobos + open. Gobo OD: 27mm
1 Static gobo wheel: 7 interchangeable gobos + open
1 Animation wheel

Effects
Motorized focus
Zoom: 16 ° -34 ° linear zoom
1 Rotating prism: 3 facet
Frost
Iris
Dimming: 0-100% linear dimming
Strobe: electronic, variable from 1-25Hz or random strobe

Protection rating
IP20

Display
Battery operated for fast addressing,15 seconds standby auto lock
Pan/tilt disengage (hold Left arrow and Right arrow buttons)

Software
Upgrade with DMX
Remote reset DMX address and fixture by DMX
Run time of fixture and light source
3 Control channel modes: 22/20/30CH

Control
Input signal isolation
RDM compatible
Electric parameter
AC100-240V, 50/60Hz

Power: 350W

Dimension and weight

Product dimension: 37.6x33.1x60.0cm
Packing dimension (carton): 75.0x48.5x46.5cm
Net weight: 20.5kgs
Gross weight (carton): 25.0kgs

Colours/ Gobos

ANIMATION WHEEL:

COLOR WHEEL: 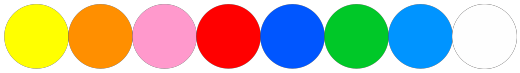

ROTATING GOBO WHEEL:

Dimensions

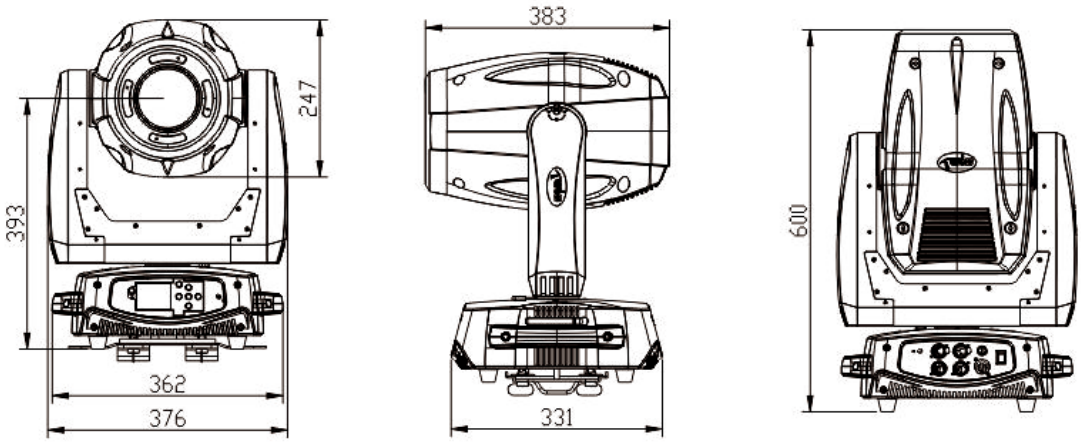

Photometrics

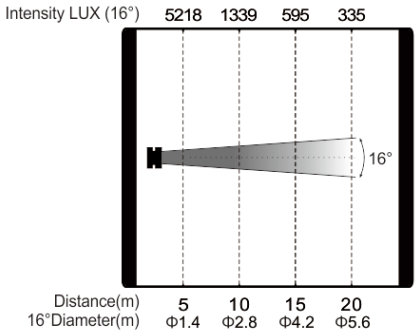

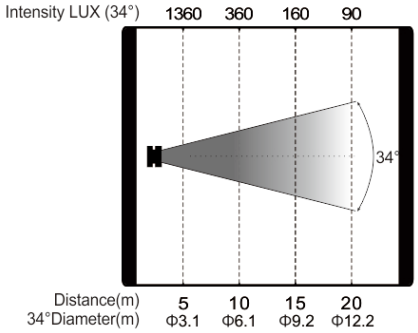

Errors and omissions are possible. All specifications are subject for change without prior notice.