Guangzhou Haoyang Electronic Co., Ltd.
Address: No. 18, the First Crossroad of Lianyun Road, Shiqi Town, Panyu District, Guangzhou.
TEL:+86 2039966388/39966399 FAX:+86 2039966388/39966399
Email: www.terbly.com Website: sales@teroly.com

SL10P IP LED Profile



Product parameters

Optical system

Source: 1000W white LED
Fixture CT: 6500K (SL10PH IP: 6000K)
Light source life expectancy：20000 hours Average Light Source Life*
CRI: Ra≥70 （SL10PH IP：Ra≥95 R9≥95）

Fixture output: 32000lm

Movement

Pan:540 °（16 bit)

Tilt: 270 ° (16 bit)

Auto pan/tilt repositioning

Color system
CMY+CTO color mixing

1 Color wheel: 7 dichroic filters+open

Gobo system
1 Rotating gobo wheel: 7 interchangeable gobos+ open
1 Static gobo wheel: 9 gobos + open

1 Animation wheel

Effects
Motorized focus
Zoom range：3.5 ° -53 °
Auto focus
2 Rotating prisms: 4-facet liner prism + 5-facet circular prism, used only or overlap, indexable, rotating in both directions
Frost: light, heavy, light+heavy
4 individually positionable blades with ±90 ° rotation of the complete framing system
Iris：5%-100% open
Dimming：0-100% linear dimming
Strobe: electronic, variable from 1-25Hz or pulse
GAMMA: 2.0, 2.2, 2.4, 2.6, 2.8, to fit different camera's linearity

Refresh rate: 1200Hz, optional S curve (25KHz) and square curve (25KHz)

Protection rating

IP65

Display
LCD Display

Pan/tilt disengage (hold Left and Right buttons), support to complete the reset detection in the flight case

Software
Upgrade with DMX
Remote reset DMX address and fixture by DMX
Run time of fixture and light source
2 Control channel modes: 40/62CH

Auto thermal protection

Control
Input signal isolation

RDM protocol

Electric parameter

AC200-240V, 50/60Hz

Power consumption: 1400W

Dimension and weight

Product dimension: 395x270x702mm
Packing dimension (carton): 815x500x405mm
Net weight：32 kg
Gross weight（carton）：37 kg

***Testing conditions in the lab may differ based on various factors.**

Colours/ Gobos

COLOR WHEEL: 

ROTATING GOBO WHEEL: 

STATIC GOBO WHEEL: 

Dimensions

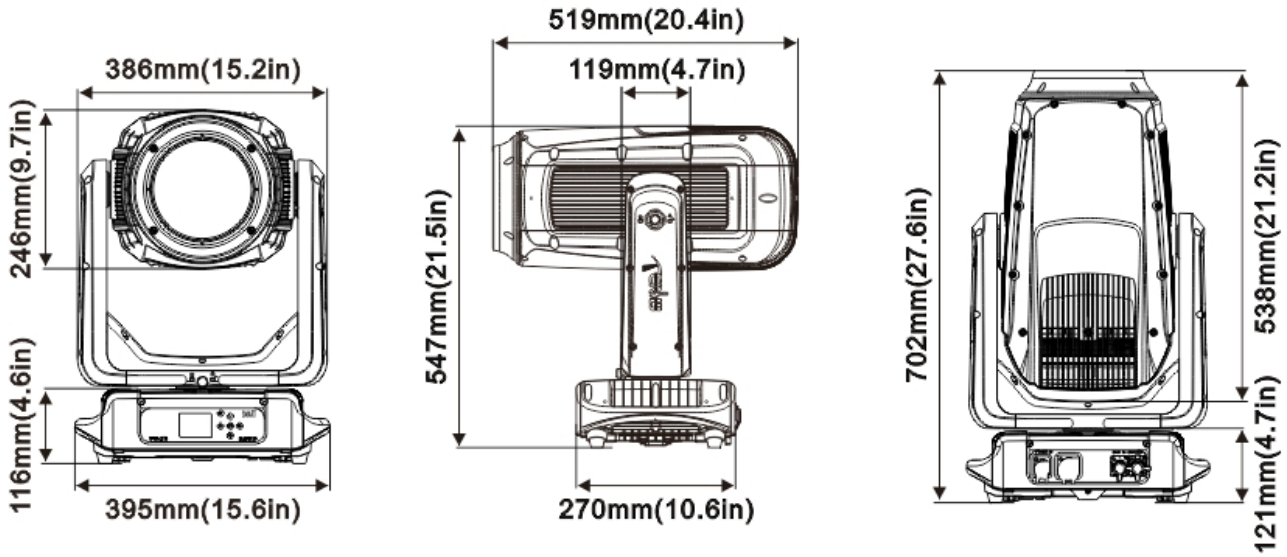

Photometrics

Guangzhou Haoyang Electronic Co., Ltd.
Address: No. 18, the First Crossroad of Lianyun Road, Shiqi Town, Panyu District, Guangzhou.
TEL:+86 2039966388/39966399 FAX:+86 2039966388/39966399
Email: www.terbly.com Website: sales@teroly.com

SL10P IP

Intensity LUX (3.5°) 125756 31439 13973 7860

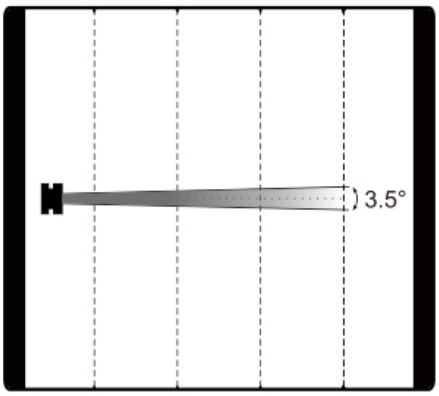

Distance(m)	5	10	15	20
Diameter(m)	Φ0.3	Φ0.6	Φ0.9	Φ1.2

SL10P IP

Intensity LUX (53°) 2437 609 271 152

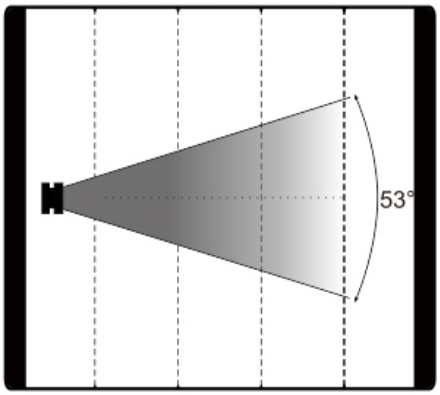

Distance(m)	5	10	15	20
Diameter(m)	Φ4.3	Φ8.6	Φ12.9	Φ17.2

SL10PH IP

Intensity LUX (3.5°) 78279 19570 8698 4892

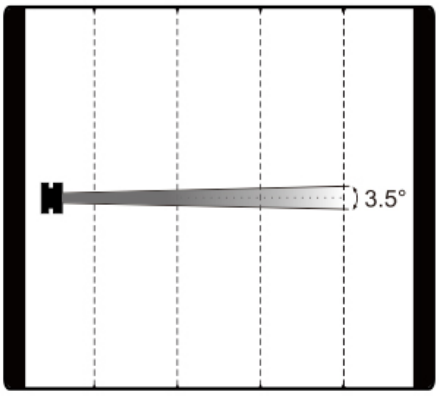

Distance(m)	5	10	15	20
Diameter(m)	Φ0.3	Φ0.6	Φ0.9	Φ1.2

SL10PH IP

Intensity LUX (53°) 1535 384 171 96

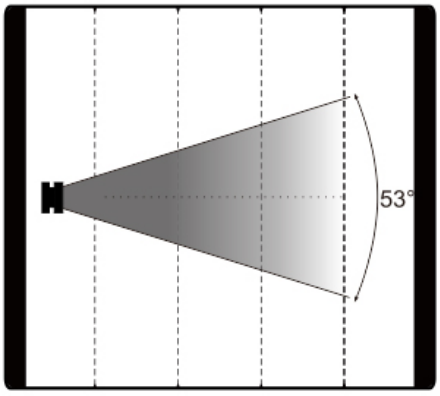

Distance(m)	5	10	15	20
Diameter(m)	Φ4.3	Φ8.6	Φ12.9	Φ17.2

Errors and omissions are possible. All specifications are subject for change without prior notice.