Guangzhou Haoyang Electronic Co., Ltd.
Address: No. 18, the First Crossroad of Lianyun Road, Shiqi Town, Panyu District, Guangzhou.
TEL:+86 2039966388/39966399 FAX:+86 2039966388/39966399
Email: www.terbly.com Website: sales@teroly.com

S620BL IP Beam



Product parameters

Optical system

Source: PHILIPS MSD Infinity 19X,420W
Fixture CT：7200K
Light source life expectancy：5000 hours service life at full power; 8000 hours service life in entertainment mode (based on Golden Sea Laboratory data; actual performance may vary depending on the operating environment)*
Illuminance: up to 245000lux@20m

Movement

Pan: 540 ° /630 ° optional(16 bit)
Tilt: 270 ° (16 bit)
Auto pan/ tilt repositioning

Color system
CMY color mixing
1 color wheel：14 dichroic filters + open , indexable, split color effect, rainbow effect

Gobo system
1 Static gobo wheel:15 gobos + open

Effect
Motorized focus
Beam angle: 1.5 °
2 Rotating prism: 4 linear prism + 8 facet prism, indexable, rotating in both directions， 16 prism macros
Frost
Dimming: 0-100% linear dimming
Shutter: mechanical, variable from 1-25Hz or pulse

Protection rating
IP66

Display
Display: without rechargeable battery (optional with rechargeable battery, locked automatically after standby for 15 seconds)
Pan/tilt disengage (hold Left and Right arrow buttons), support to complete the reset detection in the flight case

Software
Upgrade with DMX
Remote reset DMX address and fixture by DMX
Run time of fixture and light source
2 Control channel modes: 20/29 CH
Auto thermal protection

Control

Input signal isolation
RDM protocol

Electric parameter
AC200-240V, 50/60Hz
Power consumption: 650W

Dimension and weight
Product dimension: 395x270x696mm
Packing dimension (carton): 808x475x385mm
Net weight: 26kg
Gross weight (carton): 30kg

***Testing conditions in the lab may differ based on various factors.**

Colours/ Gobos

COLOR WHEEL: 

:

STATIC GOBO WHEEL: 


Guangzhou Haoyang Electronic Co., Ltd.
Address: No. 18, the First Crossroad of Lianyun Road, Shiqi Town, Panyu District, Guangzhou.
TEL:+86 2039966388/39966399 FAX:+86 2039966388/39966399
Email: www.terbly.com Website: sales@teroly.com

Dimensions

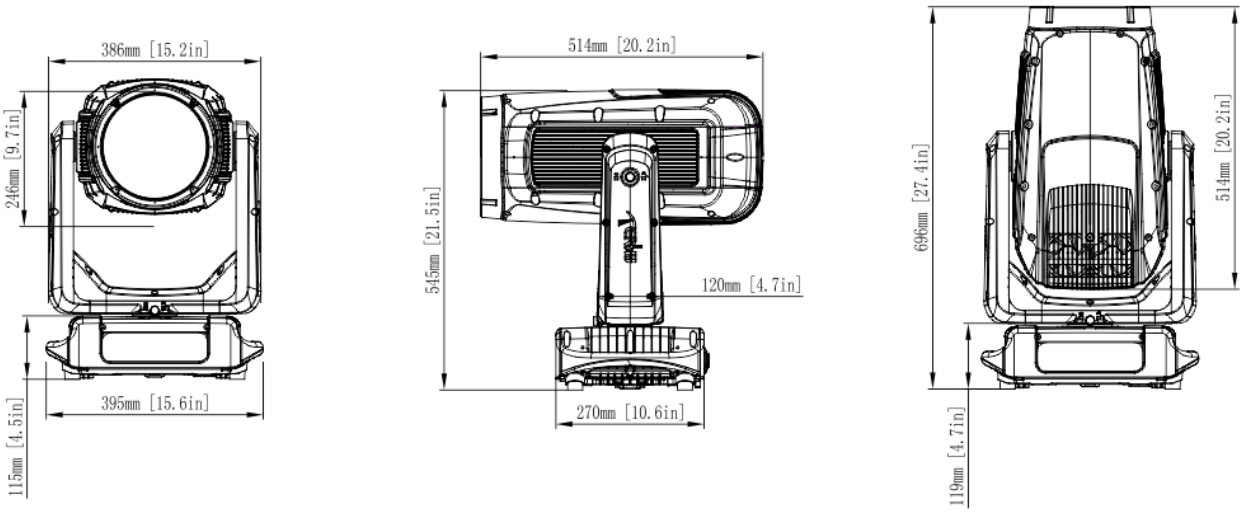

Photometrics

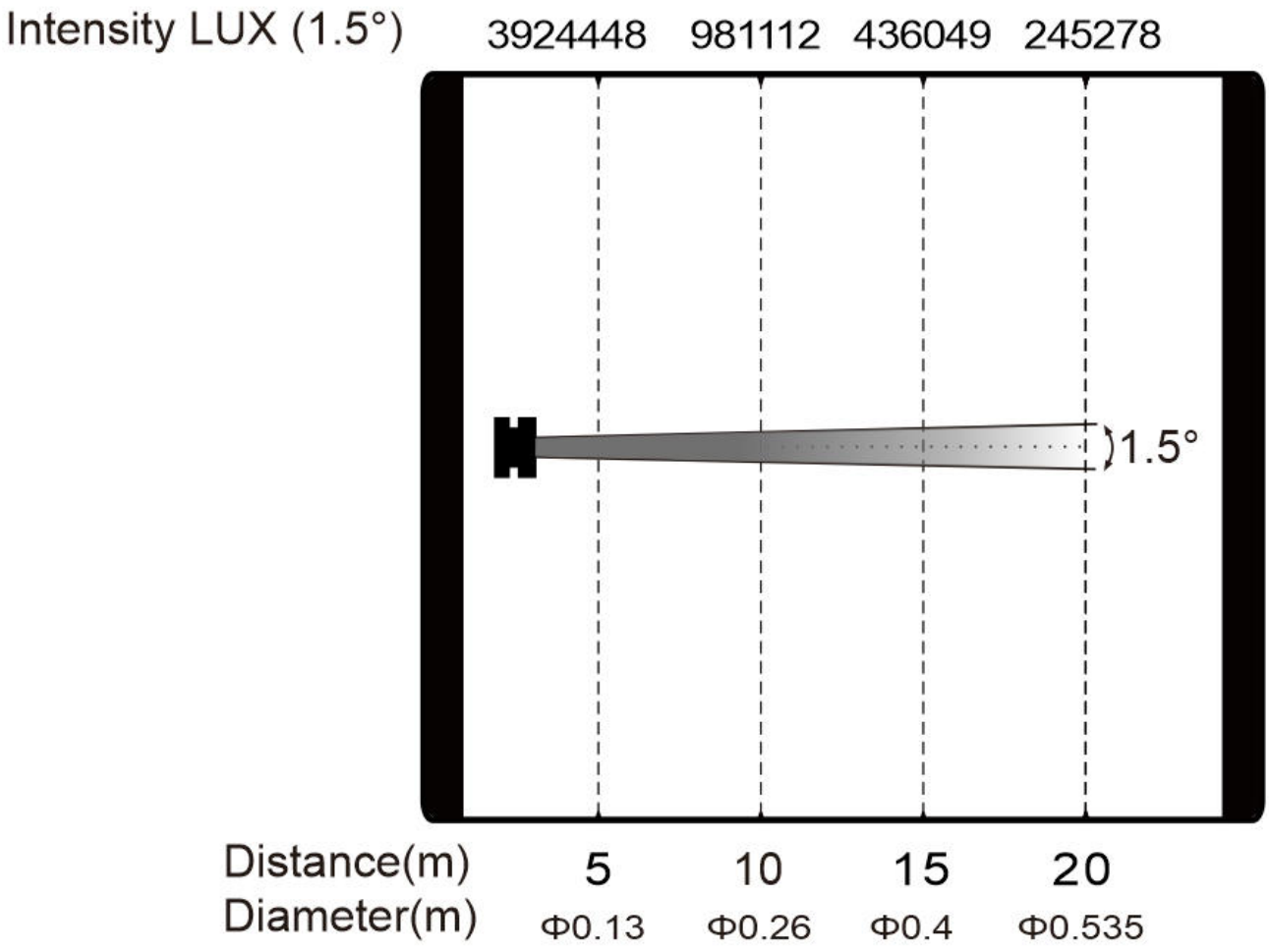

Errors and omissions are possible. All specifications are subject for change without prior notice.