Guangzhou Haoyang Electronic Co., Ltd.
Address: No. 18, the First Crossroad of Lianyun Road, Shiqi Town, Panyu District, Guangzhou.
TEL:+86 2039966388/39966399 FAX:+86 2039966388/39966399
Email: www.terbly.com Website: sales@teroly.com

# S620BL Beam




## Product parameters

## Optical system

Source: PHILIPS MSD Infinity 19X,420W
Fixture CT：7200K
Light source life expectancy：5000 hours service life at full power; 8000 hours service life in entertainment mode (based on Golden Sea Laboratory data; actual performance may vary depending on the operating environment)*

Illuminance: up to 245000lux@20m

## Movement

Pan: 540 ° /630 ° optional(16 bit)
Tilt: 270 ° (16 bit)

Auto pan/ tilt repositioning

**Color system**
CMY color mixing

1 color wheel：14 dichroic filters + open , indexable, split color effect, rainbow effect

**Gobo system**

1 Static gobo wheel:15 gobos + open

**Effect**
Motorized focus
Beam angle: 1.5 °
2 Rotating prism: 4 linear prism + 8 facet prism, indexable, rotating in both directions, 16 prism macros
Frost
Dimming: 0-100% linear dimming

Shutter: mechanical, variable from 1-25Hz or pulse

**Protection rating**

IP20

## Display

Display: without rechargeable battery (optional with rechargeable battery, locked automatically after standby for 15 seconds)

Pan/tilt disengage (hold Left and Right arrow buttons), support to complete the reset detection in the flight case

## Software

Upgrade with DMX
Remote reset DMX address and fixture by DMX
Run time of fixture and light source
3 Control channel modes: 19/17/27 CH

Auto thermal protection

## Control

Input signal isolation

RDM protocol

## Electric parameter

AC200-240V, 50/60Hz

Power consumption: 600W

## Dimension and weight

Product dimension: 395x270x617mm
Packing dimension (carton): 730x475x385mm
Net weight: 20 kg
Gross weight (carton): 24 kg

***Testing conditions in the lab may differ based on various factors.**

## Colours/ Gobos

COLOR WHEEL: 


:

STATIC GOBO WHEEL: 



## Dimensions

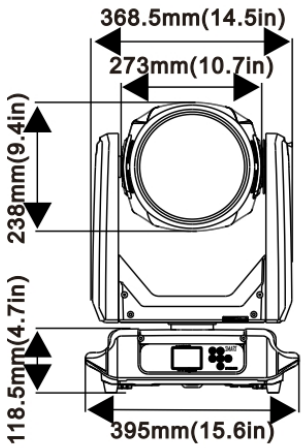


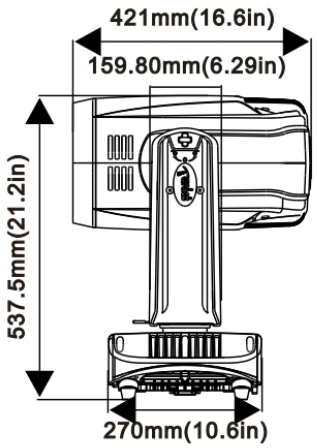


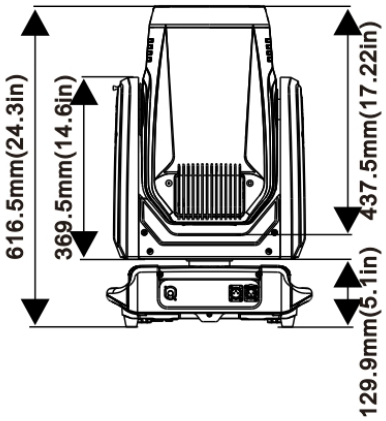


# Photometrics

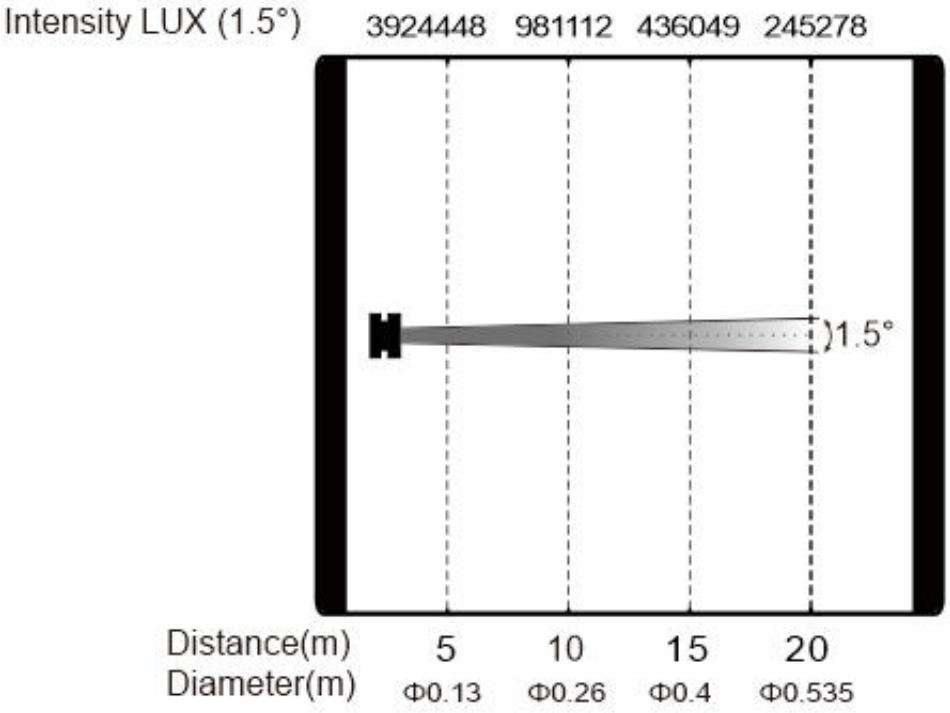


Errors and omissions are possible. All specifications are subject for change without prior notice.