Guangzhou Haoyang Electronic Co., Ltd.
Address: No. 18, the First Crossroad of Lianyun Road, Shiqi Town, Panyu District, Guangzhou.
TEL:+86 2039966388/39966399 FAX:+86 2039966388/39966399
Email: www.terbly.com Website: sales@teroly.com

PT160PRO SPOT



Product parameters

OPTICS
Lamp: Philips Platinum 5R
CT:8000 K, Life: 2,000H

MOVEMENT
Pan movement: 540 ° /630 ° optional (16 bit)
Tilt movement: 270 ° (16 bit)
Advanced moving system: fast, stable and quiet, auto X-Y repositioning

COLORS
CMY color mixing and speed can be adjustable
1 Color wheel: 8 dichroic filters +open, rainbow effect

GOBOS

1 Static gobo wheel: 14 indexable gobos+open
1 Rotating gobo wheel: 8 interchangeable, rotating, indexable, gobos+open

FEATURES

3 Control channel modes: 23/21/34 channels
Rotating prism: 3 facets and prism macros
Focus: motorized focus
Iris: motorized linear change from 5%-100%
Shutter: Variable from 1-25 flashes or random strobe
Dimming: 0-100% full range dimming
Zoom: 10 ° -42 °
Frost: 0-100%

DISPLAY

Advanced and convenient full-color LCD touch screen, with rechargeable battery
Locked automatically after standby for 15 seconds to prevent error; hold the button for 3 seconds to activate
Friendly reset detection: hold MENU and ENTER button to lock pan/tilt reset, able to complete reset detection inside flight case

SOFTWARE

7 pre-installed programs available upon selection
Upgrades: fast and convenient through DMX cable
Reset DMX address, remote lamp switch, reset, sound control can all be done by the console
Running time of lamp and fixture on display for reference

OTHER SPEC

Input signal isolation: guarantees stable signal transmission without interference
Auto-protection at high temperature: lamp automatically switches off when reaching high tempreture until the fixture cools down
Optional built in wireless receiver

Advanced RDM function

POWER
AC100-240V, 50/60HZ

DIMENSIONS AND WEIGHT
Packing dimension: 69.5 x 48.5 x 45.5 cm
Net Weight: 21kgs
Gross Weight: 25kgs

Colours/ Gobos

COLOR WHEEL:

ROTATING GOBO WHEEL: 

STATIC GOBO WHEEL: 

Dimensions

Guangzhou Haoyang Electronic Co., Ltd.
Address: No. 18, the First Crossroad of Lianyun Road, Shiqi Town, Panyu District, Guangzhou.
TEL:+86 2039966388/39966399 FAX:+86 2039966388/39966399
Email: www.terbly.com Website: sales@teroly.com

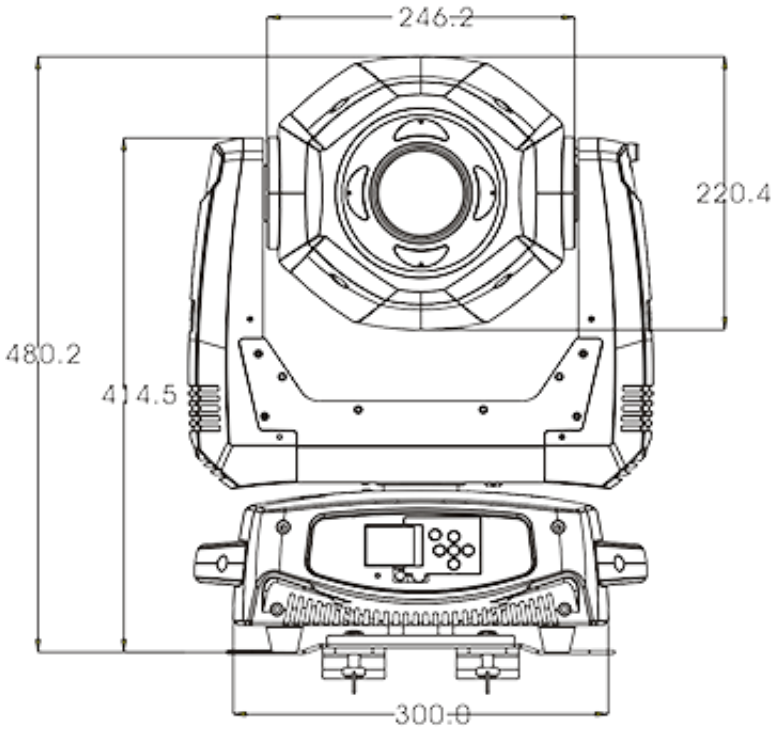

Photometrics

	1570	415	195
Intensity LUX(min)	26500	6350	2750

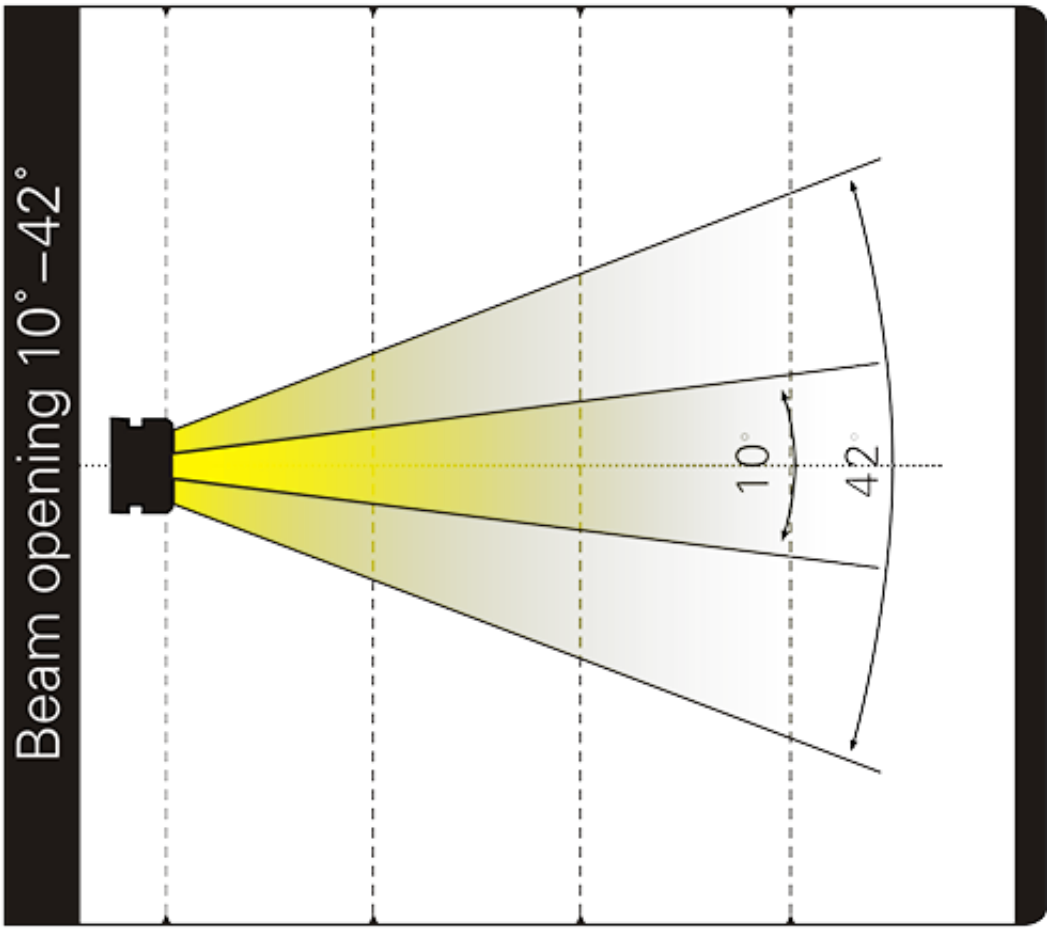

Distance(m)	2.5	5.0	7.5
10°Diameter(m)	Φ0.48	Φ0.96	Φ1.44
42°Diameter(m)	Φ1.92	Φ3.84	Φ5.76

Errors and omissions are possible. All specifications are subject for change without prior notice.