Guangzhou Haoyang Electronic Co., Ltd.
Address: No. 18, the First Crossroad of Lianyun Road, Shiqi Town, Panyu District, Guangzhou.
TEL:+86 2039966388/39966399 FAX:+86 2039966388/39966399
Email: www.terbly.com Website: sales@teroly.com

S620B IP BEAM



Product parameters

Optical system

Source: Philips MSD Platinum 19 R LL, 420W
Fixture CT：7200K
Light source life expectancy：5000 hours Average Light Source Life*
*Testing conditions in the lab may differ based on various factors.

Movement

Pan: 540 ° /630 ° optional(16 bit)
Tilt: 270 ° (16 bit)
Auto pan/ tilt repositioning

Color system

CMY color mixing
1 color wheel：14 dichroic filters + open , indexable, split color effect, rainbow effect

Gobo system
1 Static gobo wheel:15 gobos + open

Effect
Motorized focus
Beam angle: 1.5 °
2 Rotating prism: 4-facet linear prism + 8-facet circular prism, indexable, rotating in both directions， 16 prism macros
Frost
Dimming: 0-100% linear dimming
Strobe: electronic, variable from 1-25Hz or pulse

Protection rating
IP66

Display
Display: optional with rechargeable battery, locked automatically after standby for 15 seconds
Pan/tilt disengage (hold Left and Right arrow buttons), support to complete the reset detection in the flight case

Software
Upgrade with DMX
Remote reset DMX address and fixture by DMX
Run time of fixture and light source
2 Control channel modes: 20/29 CH
Auto thermal protection

Control
Input signal isolation

RDM protocol

Electric parameter

AC200-240V, 50/60Hz
Power consumption: 650W

Dimension and weight

Product dimension: 395x270x696mm
Packing dimension (carton): 808x475x385mm
Net weight: 26kg
Gross weight (carton): 30kg

Colours/ Gobos

COLOR WHEEL: 

:

STATIC GOBO WHEEL: 


Dimensions

Guangzhou Haoyang Electronic Co., Ltd.
Address: No. 18, the First Crossroad of Lianyun Road, Shiqi Town, Panyu District, Guangzhou.
TEL:+86 2039966388/39966399 FAX:+86 2039966388/39966399
Email: www.terbly.com Website: sales@teroly.com

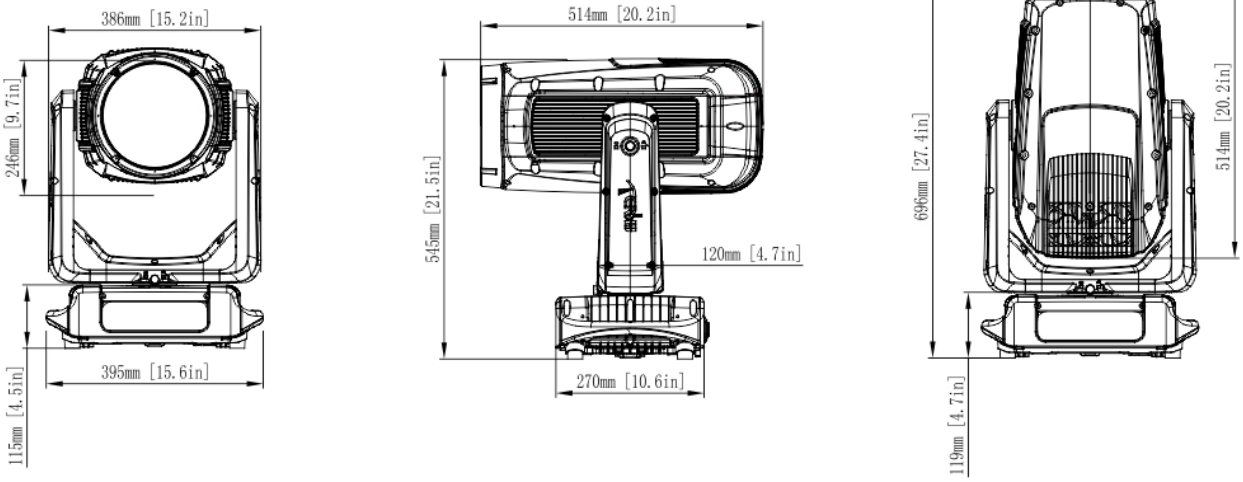

Photometrics

Guangzhou Haoyang Electronic Co., Ltd.
Address: No. 18, the First Crossroad of Lianyun Road, Shiqi Town, Panyu District, Guangzhou.
TEL:+86 2039966388/39966399 FAX:+86 2039966388/39966399
Email: www.terbly.com Website: sales@teroly.com

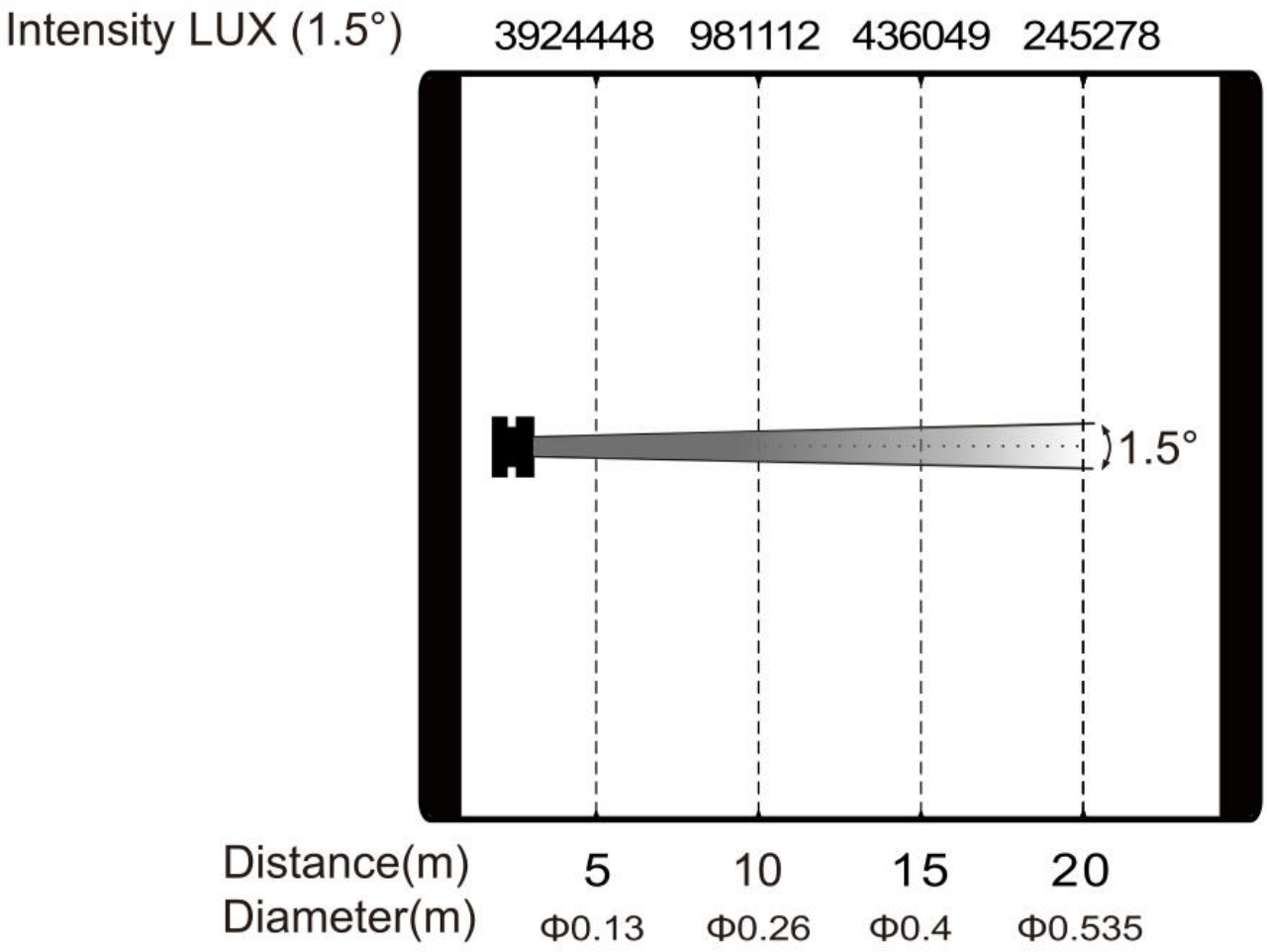

Errors and omissions are possible. All specifications are subject for change without prior notice.