G550B IP BEAM

Defender Series



Product parameters

Optical system

Source: Philips MSD Platinum 500L Flex
Fixture CT: 6500K
Lamp life expectancy：4,000h
CRI: ≥70
Fixture output: 20,000lm
Illuminance: 290000lux@20m

Movement

Pan: 540 ° /630 ° optional(16 bit)
Tilt: 270 ° (16 bit)
Auto X/Y repositioning

Color system
CMY color mixing
1 Color wheel: 16 dichroic filters + open

Gobo system
1 Rotating gobo wheel: 8 interchangeable gobos + open. Gobo OD: 14mm
1 Static gobo wheel: 17 gobos + open

Effects
Motorized focus
Beam angle: 1.7 °
2 rotating prisms: 6 facet + 32 facet, dynamic prism morph, indexable with macros
Frost：light frost, heavy frost
Dimming: 0-100% linear dimming
Shutter: mechanical with various speed

Protection rating
IP65

Display
Battery operated for fast addressing, 15 seconds standby auto lock
Pan/tilt disengage (hold Left arrow and Right arrow buttons)

Software
Upgrade with DMX
Remote reset DMX address and fixture by DMX
Run time of fixture and light source
2 Control channel modes: 24/34CH

Control
Input signal isolation
Auto thermal protection circuit

RDM protocol

Electric parameter

AC120-240V, 50/60Hz
Power: 800W

Dimension and weight

Product dimension: 506.7 x 370 x 701.4mm
Packing dimension (carton): 620 x 545 x 820mm
Net weight: 49kg
Gross weight (carton): 60.5kg

Colours/ Gobos

COLOR WHEEL: 

ROTATING GOBO WHEEL: 

STATIC GOBO WHEEL: 


Dimensions

Guangzhou Haoyang Electronic Co., Ltd.
Address: No. 18, the First Crossroad of Lianyun Road, Shiqi Town, Panyu District, Guangzhou.
TEL:+86 2039966388/39966399 FAX:+86 2039966388/39966399
Email: www.terbly.com Website: sales@teroly.com

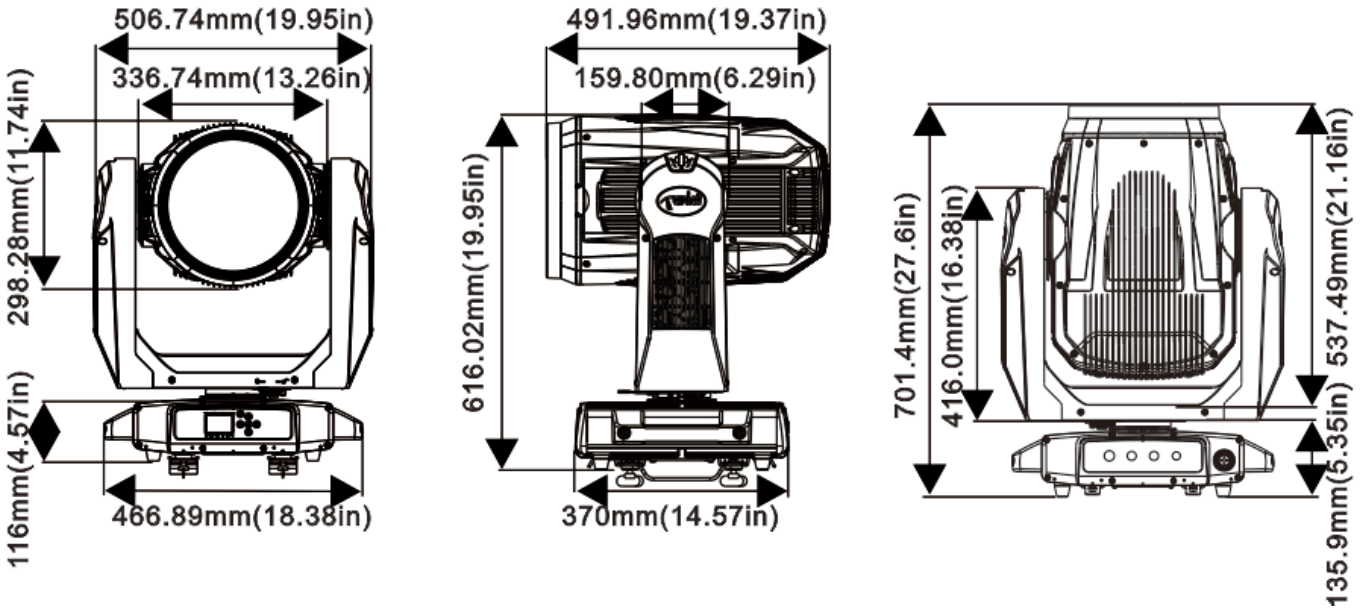

Photometrics

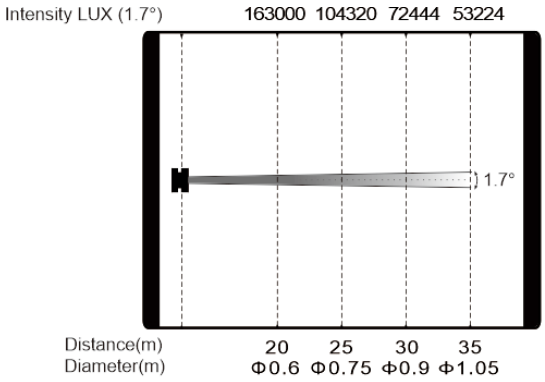

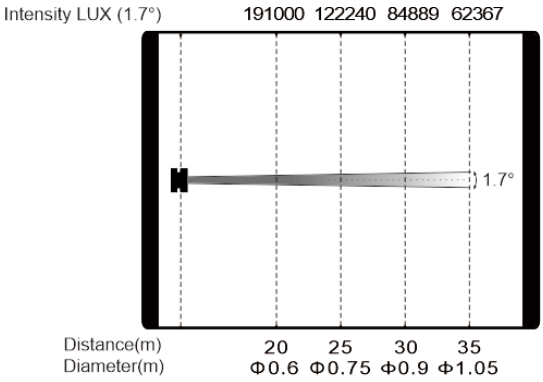

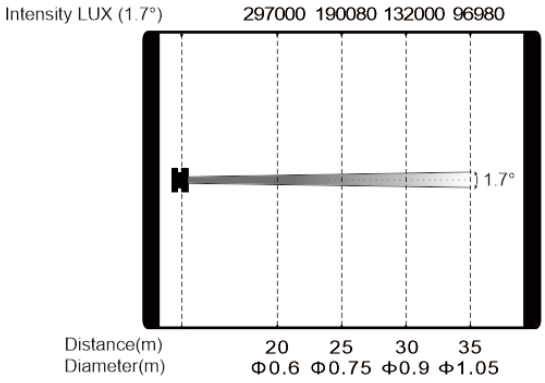

Errors and omissions are possible. All specifications are subject for change without prior notice.