Guangzhou Haoyang Electronic Co., Ltd.
Address: No. 18, the First Crossroad of Lianyun Road, Shiqi Town, Panyu District, Guangzhou.
TEL:+86 2039966388/39966399 FAX:+86 2039966388/39966399
Email: www.terbly.com Website: sales@teroly.com

S550B IP BEAM



Product parameters

Optical system

Source: Philips Platinum 25R,550W
Fixture CT: 6700K
Light source life expectancy：1,500 hours Average Light Source Life*
Fixture output: 22,000lm

Illuminance: 208800lux@20m

Movement

Pan: 540 ° /630 ° optional(16 bit)

Tilt: 270 ° (16 bit)

Auto X/Y repositioning

Color system
CMY color mixing

1 Color wheel: 16 dichroic filters + open

Gobo system
1 Rotating gobo wheel: 8 interchangeable gobos + open. Gobo OD: 16.3mm

1 Static gobo wheel: 18 gobos + open

Effects
Motorized focus
Beam angle: 2 °
4 rotating prisms: 4 facet + 8 facet + 16 facet + 32 facet,dynamic prism morph, indexable with macros
Frost：light frost, heavy frost
Dimming: 0-100% linear dimming

Shutter: mechanical with various speed

Protection rating

IP66

Display
Battery operated for fast addressing, 15 seconds standby auto lock

Pan/tilt disengage (hold Left arrow and Right arrow buttons)

Software
Upgrade with DMX
Remote reset DMX address and fixture by DMX
Run time of fixture and light source
3 Control channel modes: 24/22/34CH

Auto thermal protection circuit

Control
Input signal isolation

RDM protocol

Electric parameter
AC200-240V, 50/60Hz

Power: 800W

Dimension and weight

Product dimension: 468x370x756mm
Packing dimension (carton): 865x570x505mm
Net weight: 44 kg

Gross weight (carton): 51kg

Patent

Patented: 4 prisms structure

*Testing conditions in the lab may differ based on various factors.

Colours/ Gobos

COLOR WHEEL: 

ROTATING GOBO WHEEL: 

STATIC GOBO WHEEL: 


Dimensions

Guangzhou Haoyang Electronic Co., Ltd.
Address: No. 18, the First Crossroad of Lianyun Road, Shiqi Town, Panyu District, Guangzhou.
TEL:+86 2039966388/39966399 FAX:+86 2039966388/39966399
Email: www.terbly.com Website: sales@teroly.com

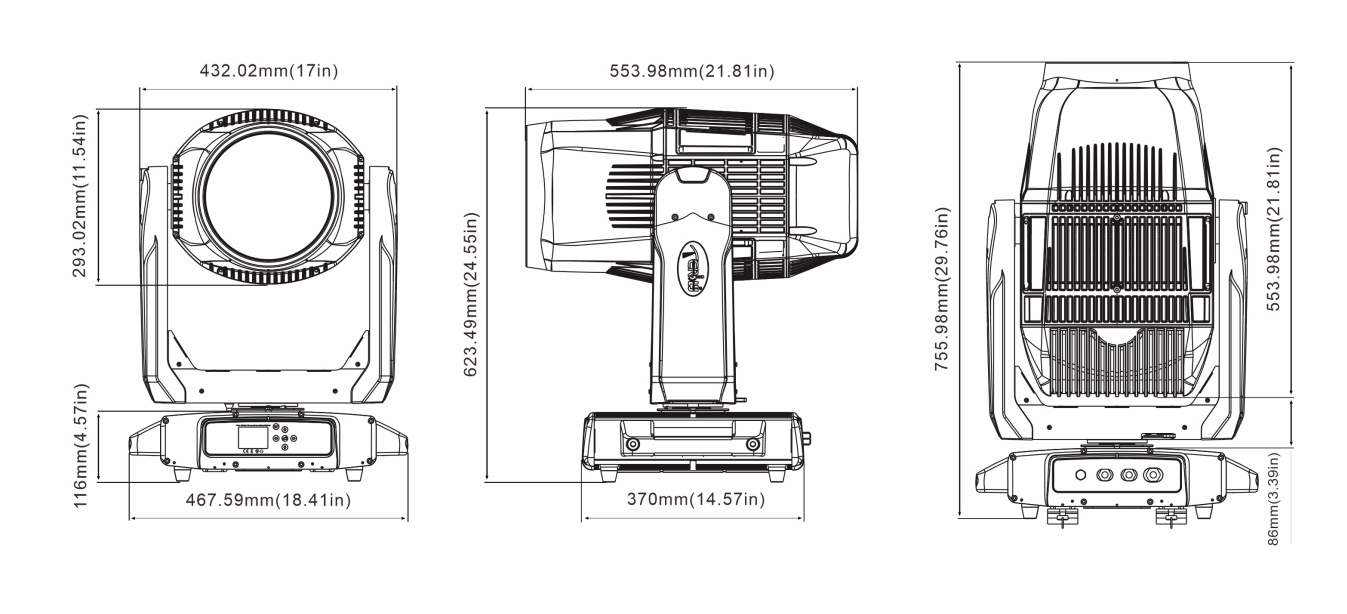

Photometrics

Guangzhou Haoyang Electronic Co., Ltd.
Address: No. 18, the First Crossroad of Lianyun Road, Shiqi Town, Panyu District, Guangzhou.
TEL:+86 2039966388/39966399 FAX:+86 2039966388/39966399
Email: www.terbly.com Website: sales@teroly.com

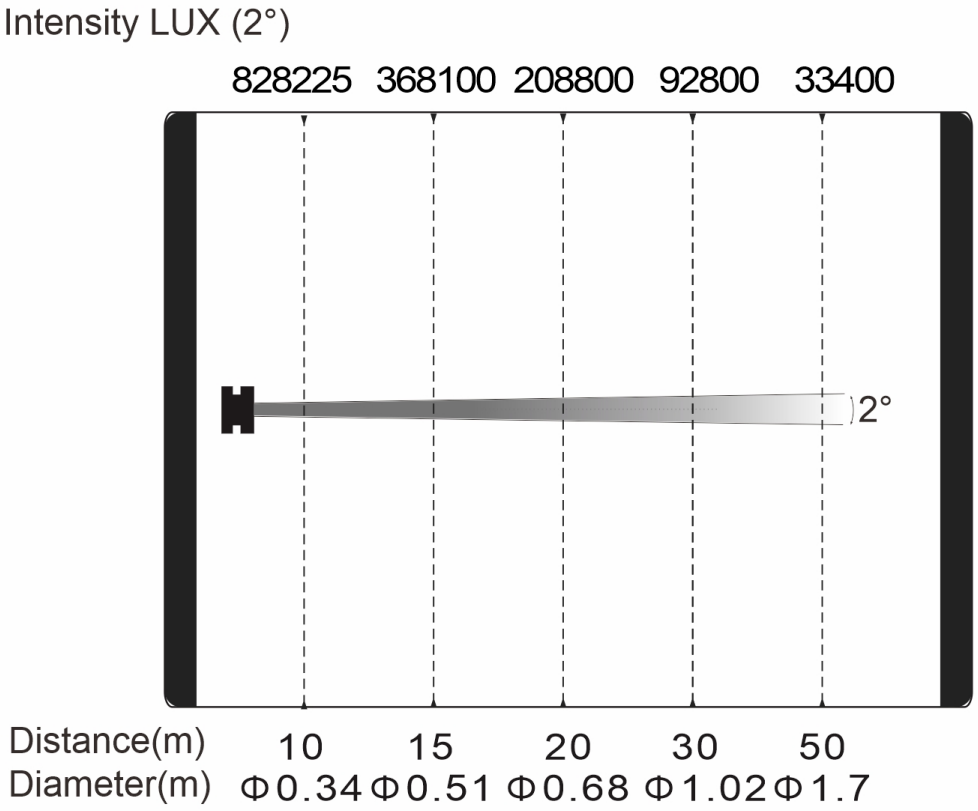

Errors and omissions are possible. All specifications are subject for change without prior notice.