Guangzhou Haoyang Electronic Co., Ltd.
Address: No. 109, Haiyong Road, Shiqi Town, Panyu District, Guangzhou.
TEL: +86 2039966388/39966399 FAX: +86 20 39966388/39966399
Email: sales@terbly.com Website: www.terbly.com

# SL5000P IP LED SPOT(WITH FRAMING)

## Product parameters

### Optical system

Source: 1400W White LED
Fixture CT: 6500K（SL5000PH IP: 6000K)
"Light source life expectancy：20,000 hours Average Light Source Life*
*Testing conditions in the lab may differ based on various factors."
CRI: Ra>70（SL5000PH IP: Ra>95)
Fixture output: 48,000lm (SL5000PH IP: 26,000lm)

### Movement

Pan: 540°/630° optional(16 bit)
Tilt: 250°(16 bit)
Auto X/Y repositioning

Guangzhou Haoyang Electronic Co., Ltd.
Address: No. 109, Haiyong Road, Shiqi Town, Panyu District, Guangzhou.
TEL: +86 2039966388/39966399 FAX: +86 20 39966388/39966399
Email: sales@terbly.com Website: www.terbly.com

**Color system**
CMY+CTO color mixing
1 Color wheel: 6 dichroic filters + open

**Gobo system**
1 Rotating gobo wheel:6 interchangeable gobos + open. Gobo OD: 36mm
1 Static gobo wheel:7 interchangeable gobos + open
1 Animation wheel

**Effects**
Motorized focus
Zoom range: 5.5 ° -50 °
Auto focus
2 Rotating prisms: 4 linear + 4 facet
Frost: light frost, heavy frost
4 individually positionable blades with ±90 ° rotation of the complete framing system
Iris
Dimming: 0-100% linear dimming
Strobe: electronic, variable from 1-25Hz or pulse
GAMMA: 2.0, 2.2, 2.4, 2.6, 2.8, to fit different camera's linearity
Refresh rate: 1200Hz

**Protection rating**
IP65

**Display**
Display
Pan/tilt disengage (hold Left arrow and Right arrow buttons)

**Software**
Upgrade with DMX
Remote reset DMX address and fixture by DMX

Run time of fixture and light source
2 Control channel modes: 40/62CH
Auto thermal protection circuit

## Control

Input signal isolation
RDM protocol

## Electric parameter

AC200-240V, 50/60Hz
Power: 1700W

## Dimension and weight

Product dimension: 457x332x825mm
Packing dimension (carton): 945x570x465mm
Net weight: 53 kg
Gross weight (carton): 59 kg

## Colours/ Gobos

COLOR WHEEL:

ROTATING GOBO WHEEL:

STATIC GOBO WHEEL:

## Dimensions

Guangzhou Haoyang Electronic Co., Ltd.
Address: No. 109, Haiyong Road, Shiqi Town, Panyu District, Guangzhou.
TEL: +86 2039966388/39966399 FAX: +86 20 39966388/39966399
Email: sales@terbly.com Website: www.terbly.com

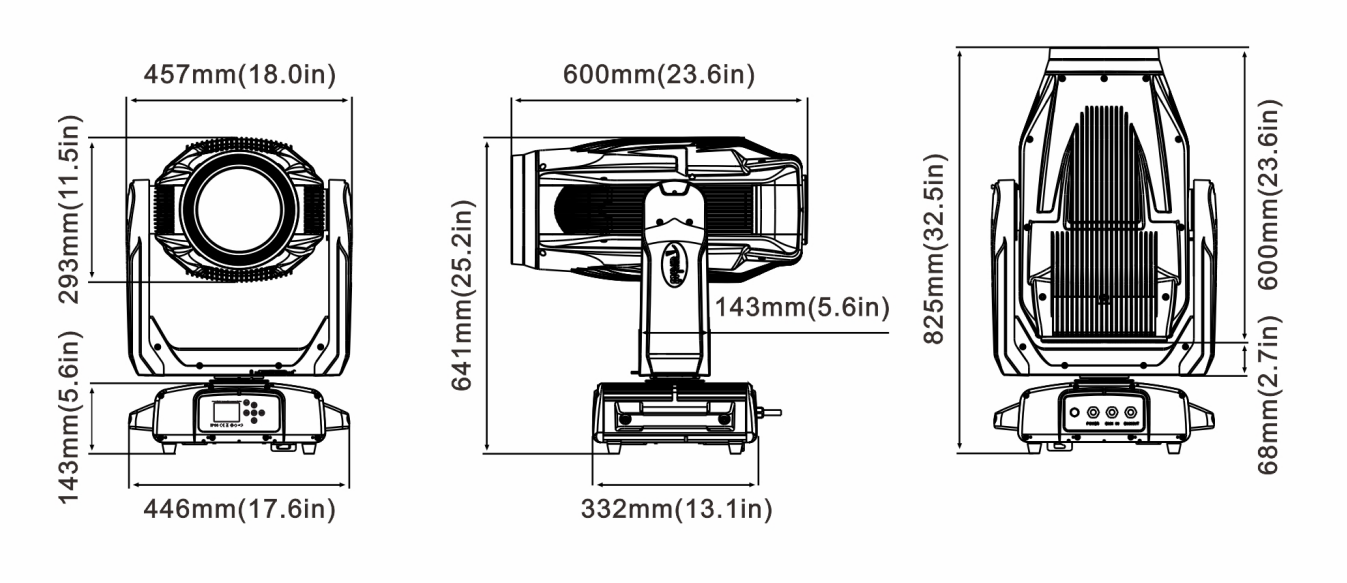


# Photometrics

Guangzhou Haoyang Electronic Co., Ltd.
Address: No. 109, Haiyong Road, Shiqi Town, Panyu District, Guangzhou.
TEL: +86 2039966388/39966399 FAX: +86 20 39966388/39966399
Email: sales@terbly.com Website: www.terbly.com

SL5000P IP
Min. Beam Mode
Intensity LUX (5.5 °)

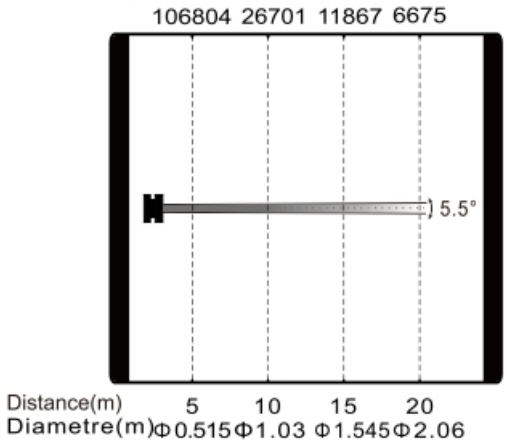


SL5000PH IP
Min. Beam Mode
Intensity LUX (5.5 °)

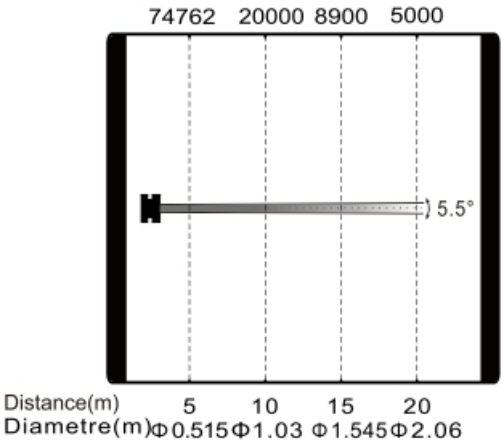


SL5000P IP
Max. Beam Mode
Intensity LUX (50°)

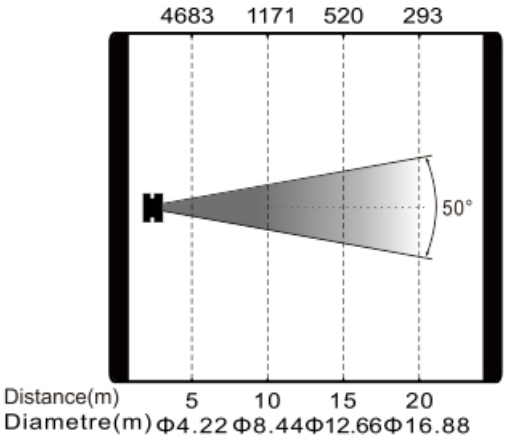


SL5000PH IP
Max. Beam Mode
Intensity LUX (50°)

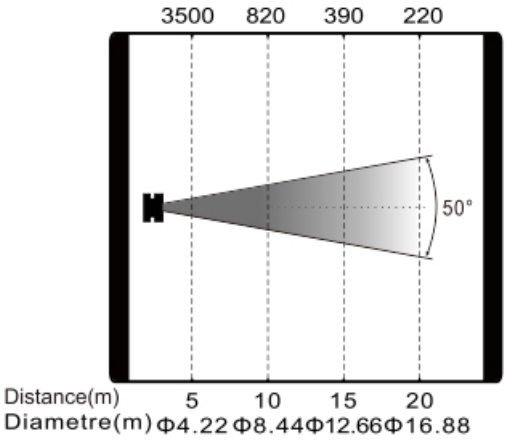


Errors and omissions are possible. All specifications are subject for change without prior notice.